DATA SHEET SPRINGRIDER PINNA 2

Text for invitation to tender | Item No: 51 3100 401

MATERIALS | SCOPE OF SUPPLY

Springrider, pre-mounted completely

Half globe:	EPDM caoutchouc 1 piece
Spring:	spring steel Ø 20 mm Ø 200 x 200 mm height
Foundation anchor:	galvanized steel

TECHNICAL INFORMATION

Dimensions:	
Main dimension:	Ø 250 mm
Height:	340 mm
Weight:	20 kg
Capacity:	acc. to normative requirements
Dimension largest piece:	500 x 500 x 840 mm
Heaviest piece:	20 kg
Max. fall height:	340 mm
Impact area:	8,30 m²
Required safety slabs:	12,25 m²
Required lawn grating:	16,00 m²
Recommended surface material:	optional

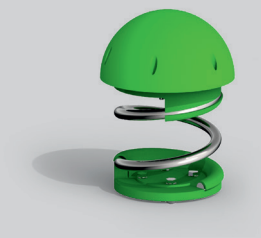

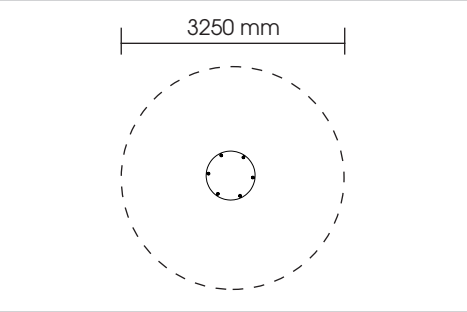

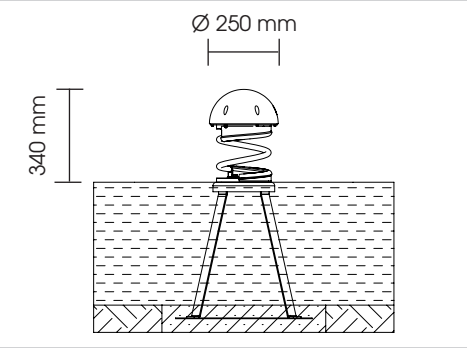

INSTALLATION

Foundations: 1

Modified installation depth possible (special edition)

Installation according to our detailled mounting instructions, see www.stilum.com

stilum GmbH Gewerbegebiet Larsheck | D-56271 Kleinmaischeid | Tel. +49 (0) 2689 92790-0 | info@stilum.de | www.stilum.com

Stand: 19.06.2024 | All rights and technical product modifications reserved.